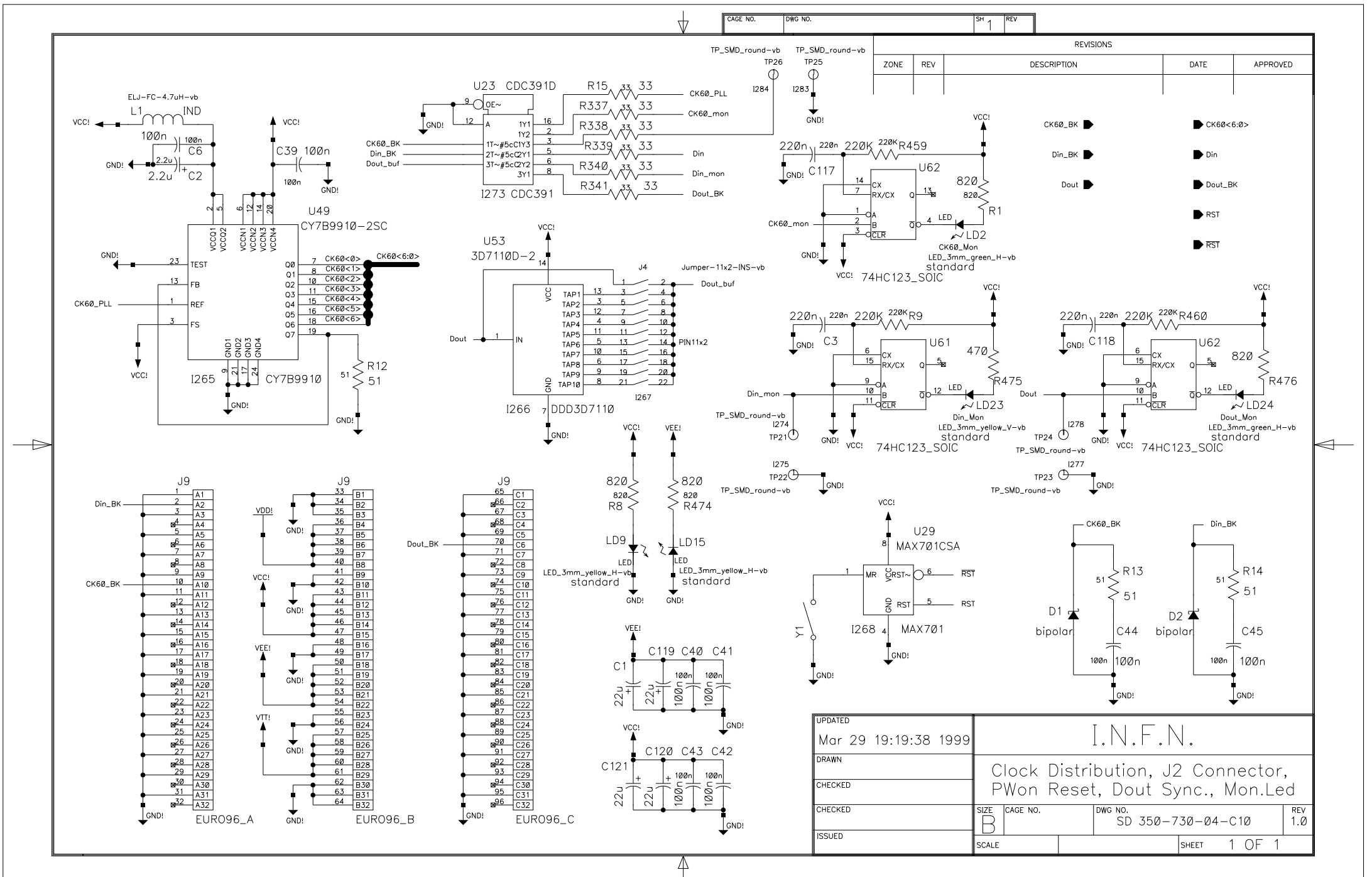

CAGE NO.
DWG NO.
SH 1
REV
REVISIONS
ZONE
REV
DESCRIPTION
DATE
APPROVED
U23 CDC391D
I273 CDC391
U49
CY7B9910-2SC
I265 CY7B9910
U53
3D7110D-2
I266 DDD3D7110
J4
Jumper-11x2-INS-vb
PIN11x2
I267
U62
74HC123_SOIC
U61
74HC123_SOIC
U62
74HC123_SOIC
U29
MAX701CSA
I268 MAX701
J9
EURO96_A
EURO96_B
EURO96_C
D1 bipolar
D2 bipolar
CK60_BK
Din_BK
Dout
CK60<6:0>
Din
Dout_BK
RST
UPDATED
Mar 29 19:19:38 1999
DRAWN
CHECKED
CHECKED
ISSUED
I.N.F.N.
Clock Distribution, J2 Connector,
PWon Reset, Dout Sync., Mon.Led
SIZE B
CAGE NO.
DWG NO. SD 350-730-04-C10
REV 1.0
SCALE
SHEET 1 OF 1